MORE SLING BRAID PATTERNS

Here are instructions and suggestions for some more sling braid patterns. Pattern diagrams showing the position of the outer lower strands are included for some but not all of them.

3. Plain diamond

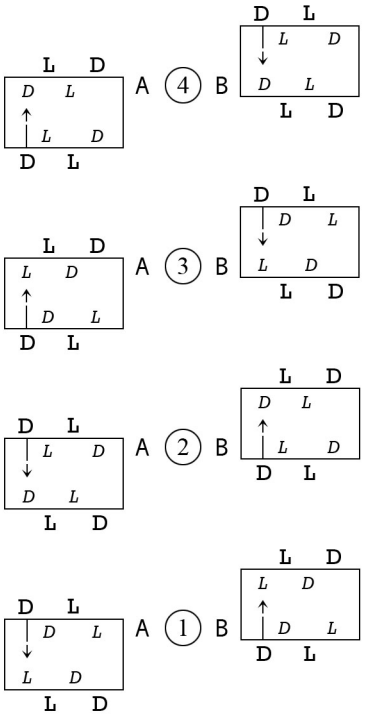



Working method (a) for 2-colour diamond with green (D) and white (L) sample

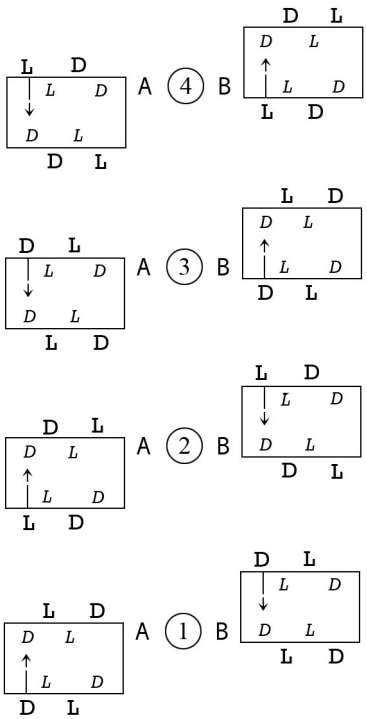



Working method (b) for 2-colour diamond with orange (D) and white (L) sample

4. Diamond with zigzag

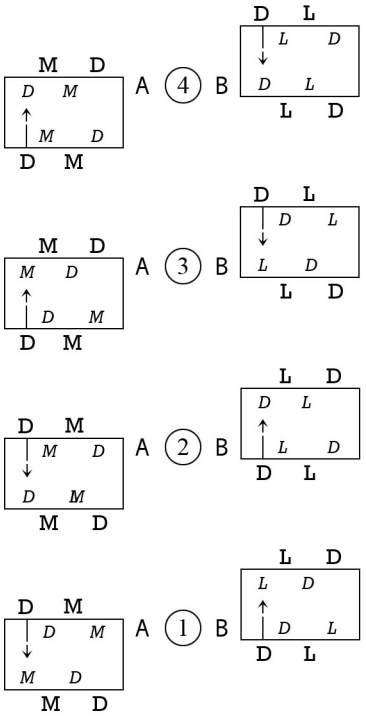



Working method (a) and sample for diamond with zigzag in 3 colours orange (D), ecru (L), green (M)

5. Rosebud

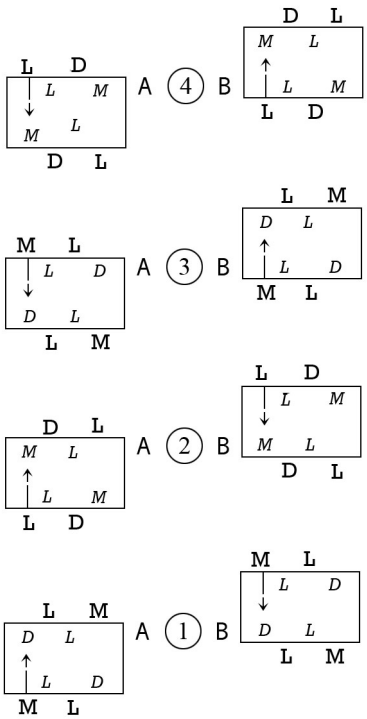



Working method (b) and sample for rosebud with 3 colours white (L), orange (M), green (D)

© Jean Leader 2022

Pattern diagrams for the plain diamond pattern

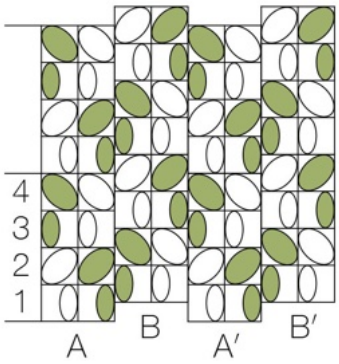

Left: diagram when using method (a)
Right: diagram for pattern (b)

In these patterns the direction in which the strands move changes every 3rd row. This appears in the diagrams as an upright oval.

Empty grids are included on the last page for you to make diagrams for the Diamond with zigzag and Rosebud patterns.

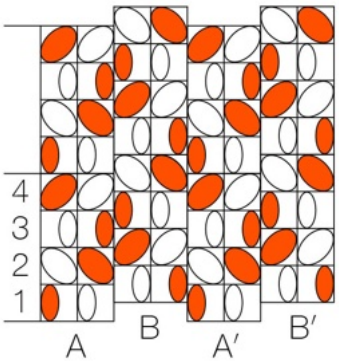

6. Chevron

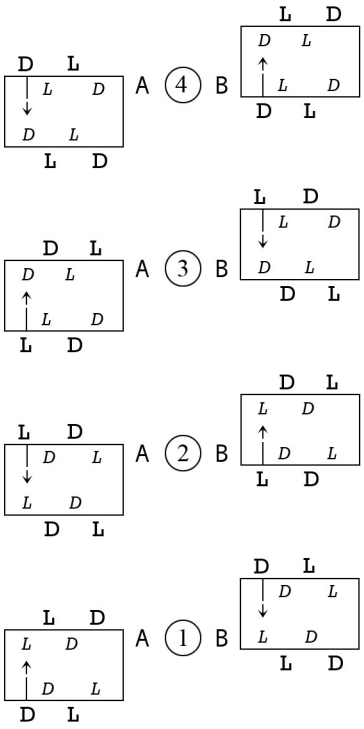



In my sample L is yellow and orange is D.

7. Small diamond

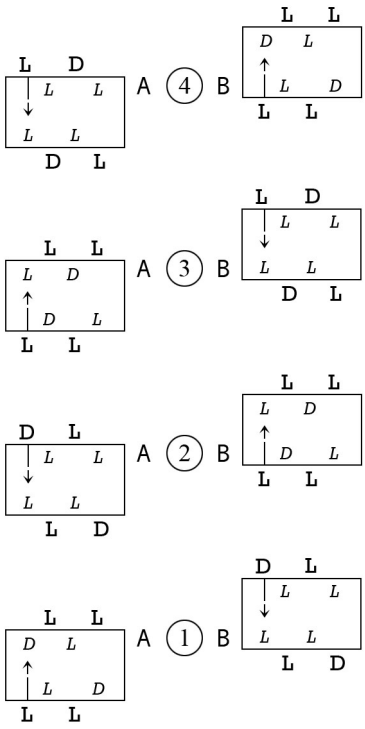



In my sample L is yellow and brown is D.

For both these patterns the direction in which the strands move changes on every row so all the ovals in the pattern diagrams are upright. In my sample of the small diamond pattern I used similar brown and yellow strands — using a thicker yarn for the brown strands (or a thinner yarn for the yellow ones) would have made the brown diamonds more prominent.

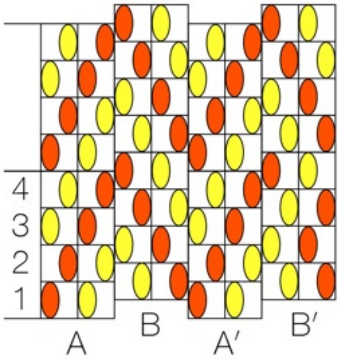

Diagram for Chevron pattern

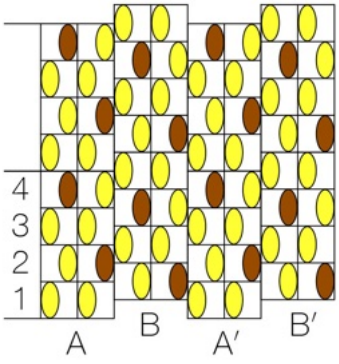

Diagram for Small diamond pattern

© Jean Leader 2022

8. Horizontally spiralling zigzag with occasional diamonds



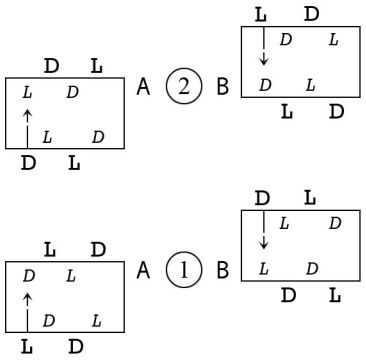

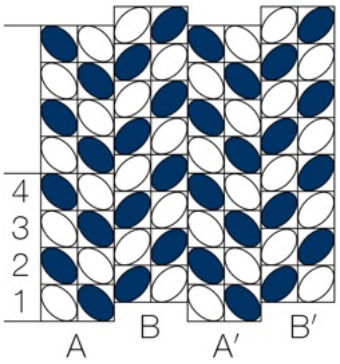

Left: Worked braid with a diamond
Centre: Working method
Right: Pattern diagram

The diamond in the photograph above has a white centre but if we could turn the braid over we would see that the diamond on the opposite side of the braid has a blue centre.
To make the diamond reverse the pattern by making the first move of the next row from the back instead of the front. Work three rows in the new direction to complete the diamond. A blank grid is included below if you want to plan this out before working further.

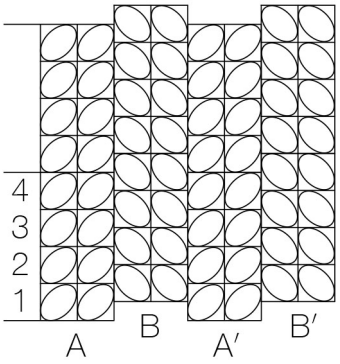

2. Vertical stripe variation

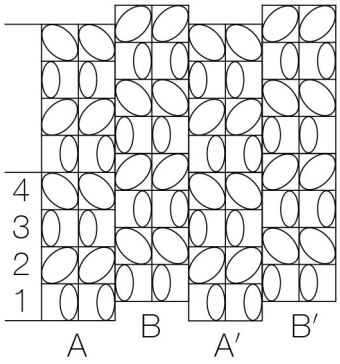

3a. Plain diamond method (a)
4. Diamond with zigzag

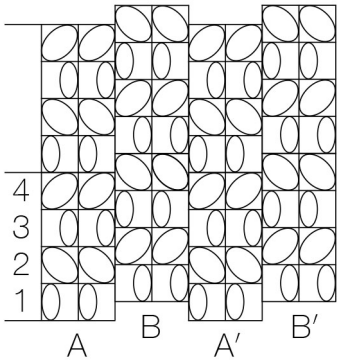

3b. Plain diamond method (b)
5. Rosebud

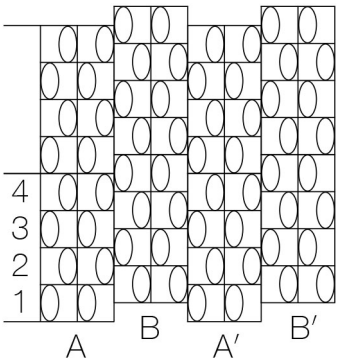

6. Chevron
7. Small diamond

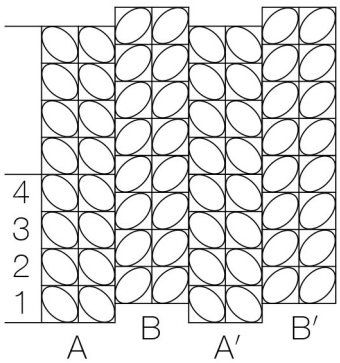

8. Spiralling zigzag with occasional diamonds

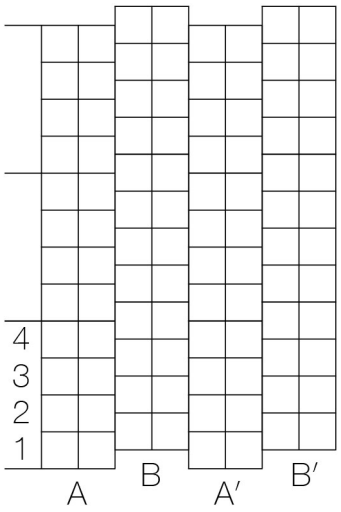

9. Blank grid for planning adding diamonds to # 8

© Jean Leader 2022